	REPUESTOS. **MODULO SECUNDARIO GPS** PARTS LIST. **SECONDARY MODULE GPS** LISTE DES PIÈCES. **MODULE SECONDAIRE GPS**	**REF: 423.12.023**	13-01-12	HR:42312023 V1 1/1

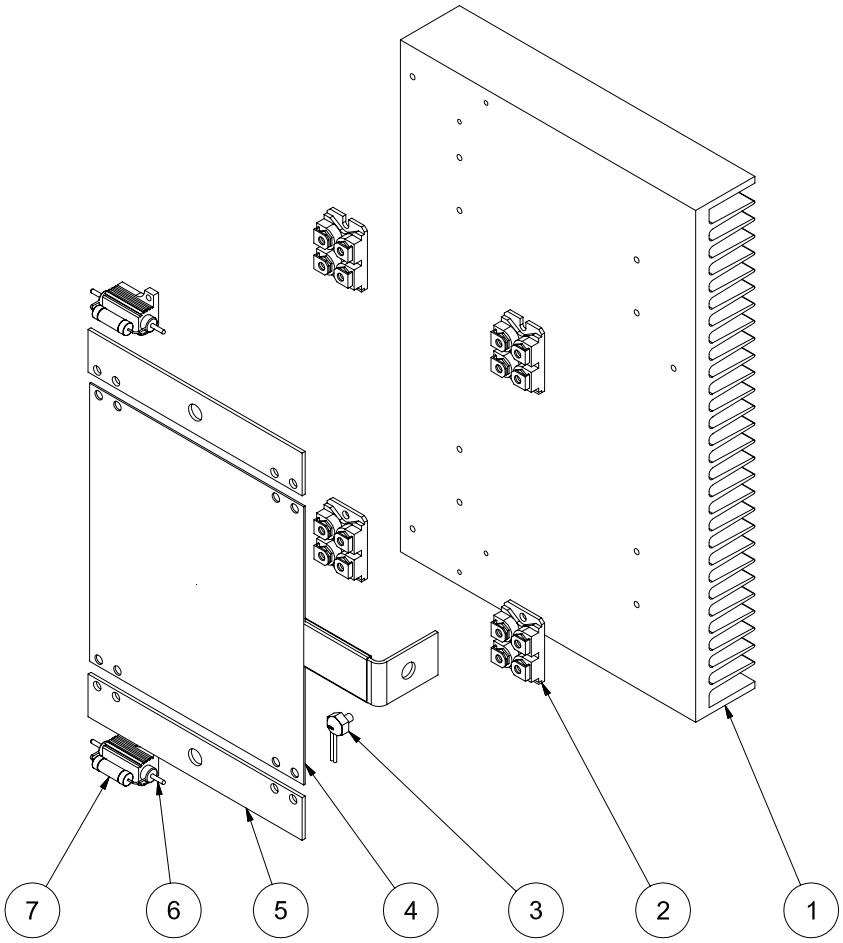

Nº	REF.	DESCRIPCION	DESCRIPTION	DESCRIPTION	V
1	42316123	DISIPADOR	DISSIPATER	DISSIPATEUR	
2	44016123	DIODO RECTIFICADOR	RECTIFYING DIODE	DIODE RECTIFICATIVE	
3	552057	TERMICO DE 70º (N.C.)	THERMAL DEVICE	TERMIQUE DISPOSITIF	
4	42312033	CJTO.CONEXION UNION 4 DIODOS	CONNECTION SET UNION 4 DIODES	ENSEMBLE CONNECTION UNION 4 DIODES	
5	42318032	CONEXIÓN UNION 2 DIODOS	CONNECTION UNION 2 DIODES	CONNECTION UNION 2 DIODES	
6	550027	RESISTENCIA 10R/25W	RESISTANCE 10R/25W	RESISENTENCE 10R/25W	
7	551047	CONDENSADOR KP 10nF/1500V	CONDENSER KP 10Nf/1500V	CONDENSATEUKP	

V	N º	~~REF~~	→	REF	IMD	observaciones