REPUESTOS. **GALA MIG 2700i**	**REF: 424.00.000**	11-04-23	HR:424.16.022 V0 1/2
PARTS LIST. **GALA MIG 2700i**			

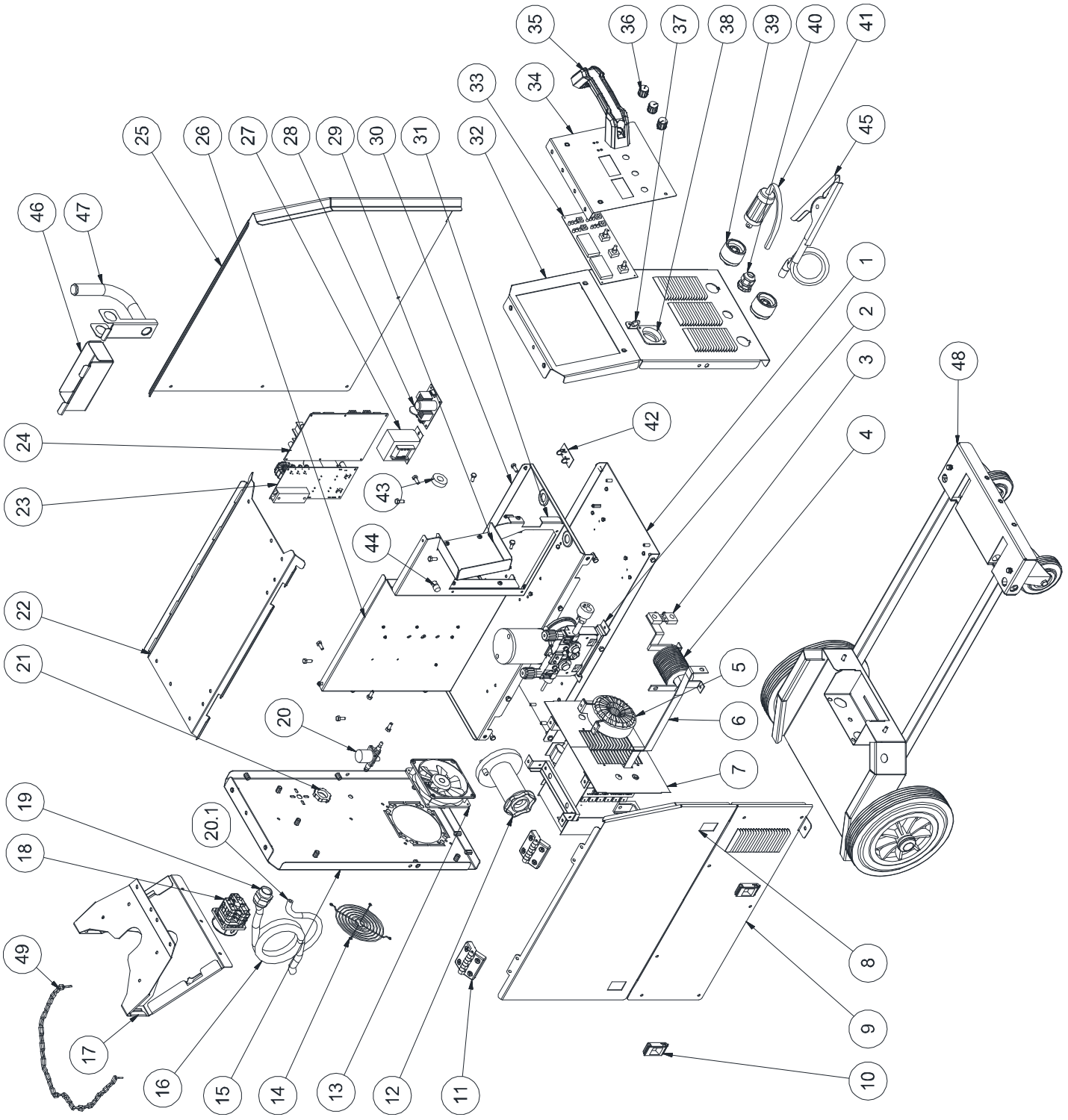

Nº	Ref	DESCRIPCION	DESCRIPTION	Uds
1	42410001	PANEL INFERIOR HORIZONTAL	HORIZONTAL BOTTOM PANEL	1
2	42416020	SISTEMA ARRASTRE	DRAGGING SYSTEM	1
3	42416009	SHUNT	SHUNT	1
4	42416125	REACTANCIA	REACTANCE	1
5	42416024	TRANSFORMADOR PRINCIPAL TOROIDAL	TOROIDAL MAIN TRANSFORMER	1
6	42416007	CONEXION MODULO POTENCIA	POWER MODULE CONNECTION	1
7	42416222	CONJUNTO MODULO POTENCIA	POWER MODULE ASSEMBLY	1
8	42410011	LATERAL MOVIL	MOBILE SIDE	1
9	42410012	LATERAL FIJO INFERIOR	LOWER FIXED SIDE	1
10	315001	CIERRE DESLIZANTE ENCASTRADO	RECESSED SLIDING LATCH	2
11	313002	BISAGRA I 40	HINGE I 40	2
12	42416019	EJE ROLLO HILO	ROLL SHAFT THREAD	1
13	50316010	VENTILADOR 120x120x32 24VDC	FAN	1
14	50716057	REJILLA VENTILADOR (120 mm)	FAN GRILLE	1
15	42410008	CONJUNTO REMACHADO FRENTE POSTERIOR	RIVETED ASSEMBLY REAR FRONT	1
16	45712022	CABLE ENTRADA	INPUT CABLE	1
17	42410010	SOPORTE SUPERIOR BOMBONA	UPPER CYLINDER SUPPORT	1
18	44016085	INTERRUPTOR O/I	SWITCH O/I	1
19	49716120	PRENSAESTOPAS PG-21	PRESS STOP PG-21	1
20	42416011	ELECTRO VALVULA	SOLENOID VALVE	1
20.1	302007	TUBO TEXOVINIL DE 6X12	6X12 TEXOVINYL PIPE	1.5M
21	49716220	TUERCA PRENSAESTOPAS PG-21	GLAND NUT PG-21	1
22	42410014	CHAPA SUPERIOR HORIZONTAL	HORIZONTAL TOP PLATE	1
23	42416092	PLACA ALIMENTACION POTENCIA	POWER SUPPLY BOARD	1
24	42416016	PLACA ELECTRONICA CONTROL	ELECTRONIC CONTROL BOARD	1
25	42410009	LATERAL FIJO	FIXED SIDE	1
26	42410003	PANEL CENTRAL VERTICAL POSTERIOR	REAR VERTICAL CENTRE PANEL	1
27	42416017	TRANSFORMADOR AUXILIAR	AUXILIARY TRANSFORMER	1
28	42416097	PLACA DEVANADO AUXILIAR TRAFO	TRANSFORMER AUXILIARY WINDING PLATE	1
29	42410007	CAJÓN PLACA ELECTRONICA PFC	PFC ELECTRONIC BOARD DRAWER	1
30	42410028	PANEL CENTRAL HORIZONTAL	HORIZONTAL CENTRAL PANEL	1
31	42410002	PANEL CENTRAL VERTICAL ANTERIOR	FRONT VERTICAL CENTRE PANEL	1
32	42410303	CONJUNTO REMACHADO FRENTE ANTERIOR	RIVETED ASSEMBLY FRONT FRONT	1
33	42416042	PLACA ELECTRÓNICA FRENTE	ELECTRONIC FRONT BOARD	1
34	42410006	CHAPA INTERFAZ	INTERFACE PLATE	1
35	42416010	ASA	HANDLE	1
36	42416050	MANDO POTENCIÓMETRO	POTENTIOMETER KNOB MIG i	3
37	42410018	SISTEMA ANCLAJE ANTI-TIRONES MANGUERA	HOSE ANTI-PULL ANCHORING SYSTEM	1
38	42416347	EMBELLECEDOR SISTEMA ARRASTRE	DRAG SYSTEM TRIM	1
39	47716035	CONECTOR	CONNECTOR	2
40.1	49816120	PRENSAESTOPAS PG-16 CON TUERCA	CABLE GLAND PG-16 WITH NUT	1
40.2	49816220	TUERCA PRENSAESTOPAS PG-16	GLAND NUT PG-16	1
41	42412560	CABLE CONEXION CAMBIO POLARIDAD	POLARITY CHANGE CONNECTION CABLE	1
42	42416028	PLACA ELECTRÓNICA FILTRO SOLDADURA	WELDING FILTER ELECTRONIC BOARD	1
43	42416033	LECTOR CORRIENTE PRIMARIO	PRIMARY CURRENT READER	1
44	42416021	BOTON INCHING	INCHING BUTTON	1
45	43812219	CABLE DE MASA	GROUND CABLE	1
46	42410015	PORTA OBJETOS	OBJECT HOLDER	1
47	42412016	PORTA MANGUERA	HOSE HOLDER	1
48	42412040	CARRO DE TRANSPORTE	TROLLEY	1
49	49216033	CADENA SUJECIÓN BOTELLA	BOTTLE CHAIN	1