| REPUESTOS. **CONJUNTO MODULO POTENCIA MIG 2700i** | **REF: 424.16.222** | 11-04-23 | HR:424.16.022 V0 1/1 |
|---|---|---|---|
| PARTS LIST. **POWER MODULE ASSEMBLY MIG 2700i** | | | |

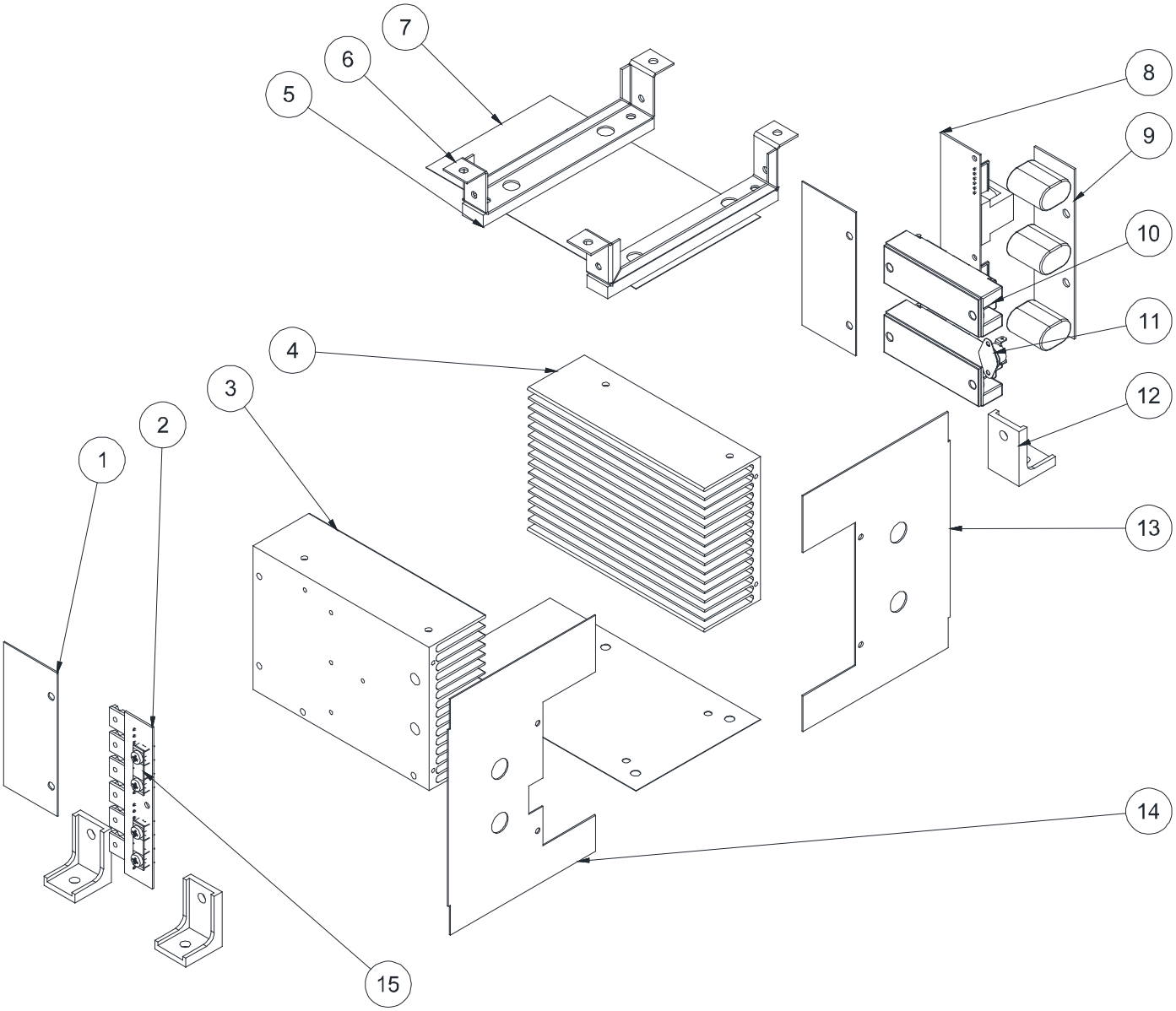


| Nº | REF | DESCRIPCION | DESCRIPTION | Ud |
|---|---|---|---|---|
| 1 | 42416004 | CANALIZADOR AIRE VERTICAL POTENCIA | VERTICAL AIR DUCTING POWER | 2 |
| 2 | 42416006 | PLACA ELECTRONICA SECUNDARIO | SECONDARY ELECTRONIC BOARD | 1 |
| 3 | 42416123 | DISIPADOR MODULO SECUNDARIO | SECONDARY MODULE HEATSINK | 1 |
| 4 | 42416115 | DISIPADOR MODULO PRIMARIO | PRIMARY MODULE HEATSINK | 1 |
| 5 | 42416013 | CALCE SISTEMA SUJECECCION SUP. POTENCIA | UPPER POWER CLAMPING SYSTEM FIT | 2 |
| 6 | 42410005 | CHAPA SISTEMA SUJECCION SUP. POTENCIA | UPPER POWER CLAMPING SYSTEM PLATE | 2 |
| 7 | 42416003 | CANALIZADOR AIRE HORIZONTAL POTENCIA | HORIZONTAL AIR DUCTING POWER | 2 |
| 8 | 42416017 | PLACA ELECTRONICA DRIVER | ELECTRONIC DRIVER BOARD | 1 |
| 9 | 42416093 | PLACA ELECTRONICA PRIMARIO | PRIMARY ELECTRONIC BOARD | 1 |
| 10 | 00554404 | MODULO IGBT | IGBT MODULE | 2 |
| 11 | 42416108 | TERMICO | THERMAL | 1 |
| 12 | 42416012 | PATA MODULO POTENCIA | POWER MODULE LEG | 3 |
| 13 | 42416001 | SEPARADOR MODULO PRIMARIO | PRIMARY MODULE SEPARATOR | 1 |
| 14 | 42416002 | SEPARADOR MODULO SECUNDARIO | SECONDARY MODULE SEPARATOR | 1 |
| 15 | 42416008 | CONEXIÓN PLACA ELECTRONICA SECUNDARIO | CONNECTION SECONDARY ELECTRONIC BOARD | 2 |